SP-4 SPACERS FOR TRIPLE BUNDLE

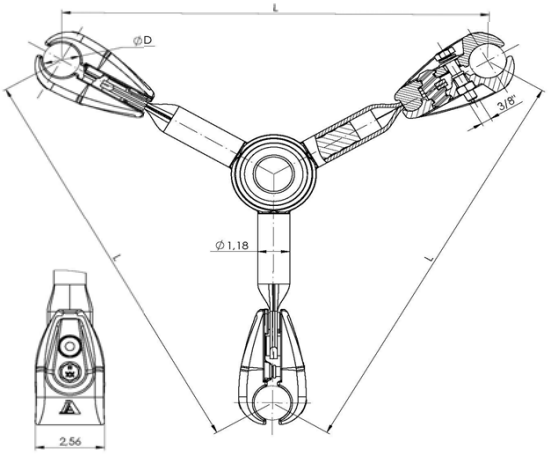

Material: Clamp: Aluminum EN-1706 (similar to ANSI A413.0).				Bolt: ASTM A325.
Body: Alloy A1 . EN-755 (similar to ASTM B221).				Nut: ASTM A563.
Steel Parts finish: Hot dip galvanising ASTM A153.				Insert: Neoprene
Reference	Ø Conductor (inch)		Dimensions (inch)	Tightening	Weight
	Min.	Max.	L	Torque (ftlb)	(lb)
SP-4-3/13-16/L/AM	0.51	0.63	L	30	-
SP-4-3/16-20/L/AM	0.63	0.79	L	30	-
SP-4-3/20-24/L/AM	0.79	0.94	L	30	-
SP-4-3/24-28/L/AM	0.94	1.10	L	30	-
SP-4-3/28-33/L/AM	1.10	1.30	L	30	-

NOTE: "L" lengths upon request.

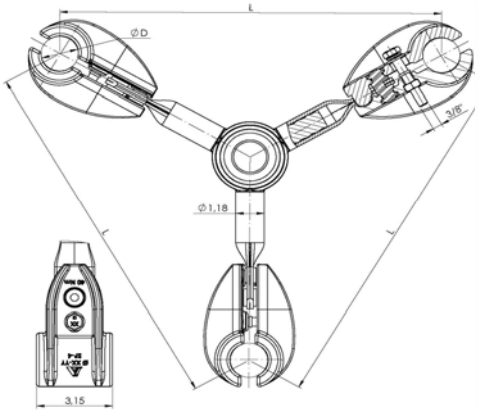

Material: Clamp: Aluminum EN-1706 (similar to ANSI A413.0).				Bolt: ASTM A325.
Body: Alloy A1 . EN-755 (similar to ASTM B221).				Nut: ASTM A563.
Steel Parts finish: Hot dip galvanising ASTM A153.				Insert: Neoprene
Reference	Ø Conductor (inch)		Dimensions (inch)	Tightening	Weight
	Min.	Max.	L	Torque (in-lb)	(lb)
SP-4/33-35/L/AM	1.30	1.38	L	30	-
SP-4/35-38/L/AM	1.38	1.50	L	30	-
SP-4/38-41/L/AM	1.50	1.61	L	30	-
SP-4/41-44/L/AM	1.61	1.73	L	30	-
SP-4/44-47/L/AM	1.73	1.85	L	30	
SP-4/47-50/L/AM	1.85	1.97	L	30	-

NOTE: "L" lengths upon request.