Arruti Substations

ALUMINUM BUS SUPPORTS

REFERENCE
MPEBI

Aluminum alloy support for alluminum pipe.

Material: Casting - Aluminum Alloy
Hardware: Stainless or Galvanized Steel

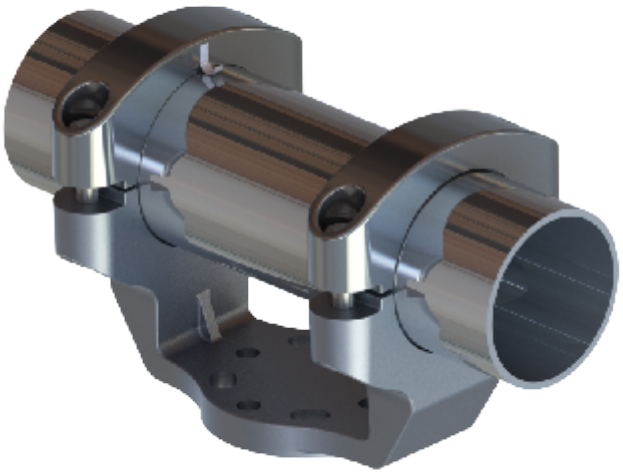

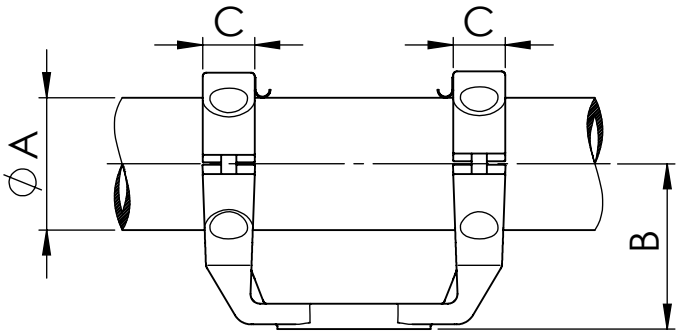

ØD	ØE*	ØF
4.25	3	9/16
6.22	5	11/16
8.07	7	13/16

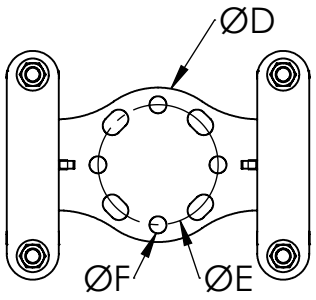

CATALOG NUMBER	DIMENSIONS			Tightening torque (ft.lb)
	A	B	C	
MPEBI-73*	2 1/2	4.13	1.89	40
MPEBI-89*	3	4.13	1.89	40
MPEBI-101*	3 1/2	4.13	1.89	40
MPEBI-114*	4	5.51	2.20	55
MPEBI-141*	5	6.69	2.20	55
MPEBI-168*	6	6.69	2.20	55

*ADD:
-76 for 3" insulator, -127 for 5" insulator,-178 for 7" insulator.
Example: MPEBI-114127 for 4" tube an 5" Insulator.