Arruti Substations

BRONZE DUPLEX CONNECTORS

REFERENCE
U.6

Duplex connector.

Material: Casting - Bronze
Hardware: Stainless or Galvanized Steel

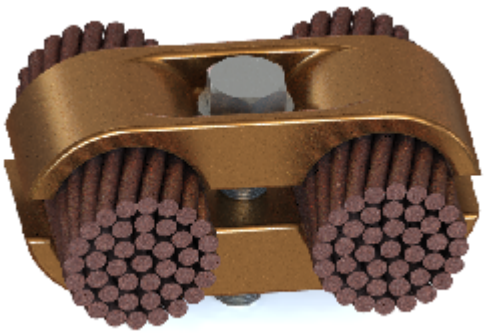

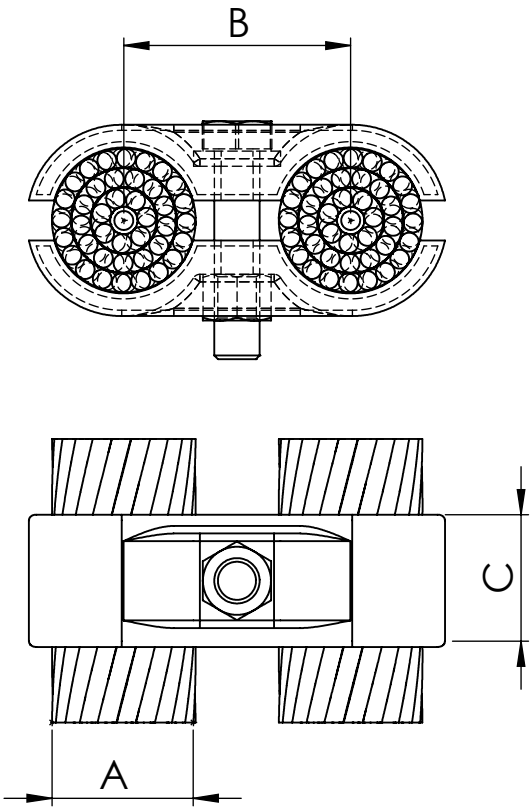

CATALOG NUMBER	CONDUCTOR RANGE	DIMENSIONS		Tightening torque (ft.lb)
	A	B	C	
U.6-250	0.69-0.79	2.36	1.38	40
U.6-400	0.89-1.02	2.36	1.38	40
U.6-500	1.14	2.36	1.38	40